Digital Electronics

Computer and Electronics Engineering

Roger Sash
Herb Detloff
Alisa Gilmore

University of Nebraska

THE PETER KIEWIT INSTITUTE
Information Science, Technology & Engineering

Digital Electronics

Objectives:

The objectives of this module are to:

- Become familiar with basic digital counter concepts
- Test counter circuits using circuit simulation software
- Build digital circuits using prototyping equipment

To accomplish the objectives, we will give you a short overview of electrical and digital logic concepts. You will then build circuits described later in the handout using the MultiSim simulation program. A variety of circuits are described; however, you may not have time to complete the simulation of all of them.

The simulation program we will be using is MultiSim 8 by Electronics Workbench. www.electronicsworkbench.com. It is a user-friendly program which a user can create and test circuits in a relatively short time. It has a variety of components listed in a series of menus. One of the initial difficulties is finding the component you want. The circuits we are going to build start on page 11.

Simulating Circuits

The circuits which we will construct and simulate are digital. In a digital circuit we are only concerned if a signal is present or not. A switch is an example of a digital circuit. It is either on or off. Terms used for the presence of a signal are **on**, **high**, **true**, and **one**. Terms used for the absence of a signal are **off**, **low**, **false** and **zero**.

Binary	Decimal
d c b a	
8 4 2 1	
0 0 0 0	0
0 0 0 1	1
0 0 1 0	2
0 0 1 1	3
0 1 0 0	4
0 1 0 1	5
0 1 1 0	6
0 1 1 1	7
1 0 0 0	8
1 0 0 1	9

Decimal Numbers in Computers

Many applications require the use of a counter. The next circuit will count from 0 to 9 in binary. The binary number system uses base 2. Characters in the right column (sometimes labeled a) have the value 2^0. In the next column to the left (labeled b) they have the value 2^1. The next column (labeled c) is 2^2. The next (d) is 2^3. They evaluate from left to right as 8 - 4 - 2 - 1. The binary numbers from zero through 9 are:

For ease of use, we are using a modified binary system which only has values of zero through nine. This is referred to as binary coded decimal (BCD).

How to Find Components

A list of component icons is shown along with the menu selections used to access them. The order of presentation is the same as the order in which you will be constructing the circuits.

If your menu toolbar only shows icons without the text which identifies them, you need to turn on the text so the toolbar is as shown below:

How to turn on the Toolbar text

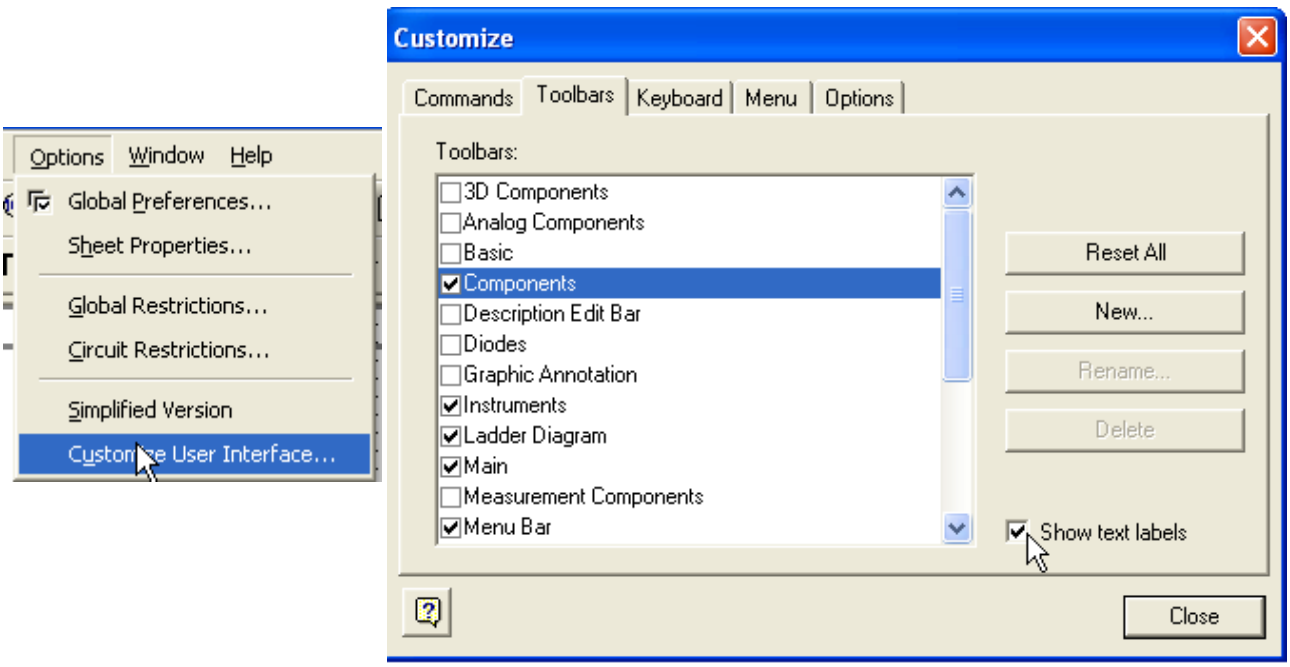

Circuit 1: Toggle Flip-Flop

To flip the components so they are oriented as shown, use Edit | Orientation | Flip Horizontal

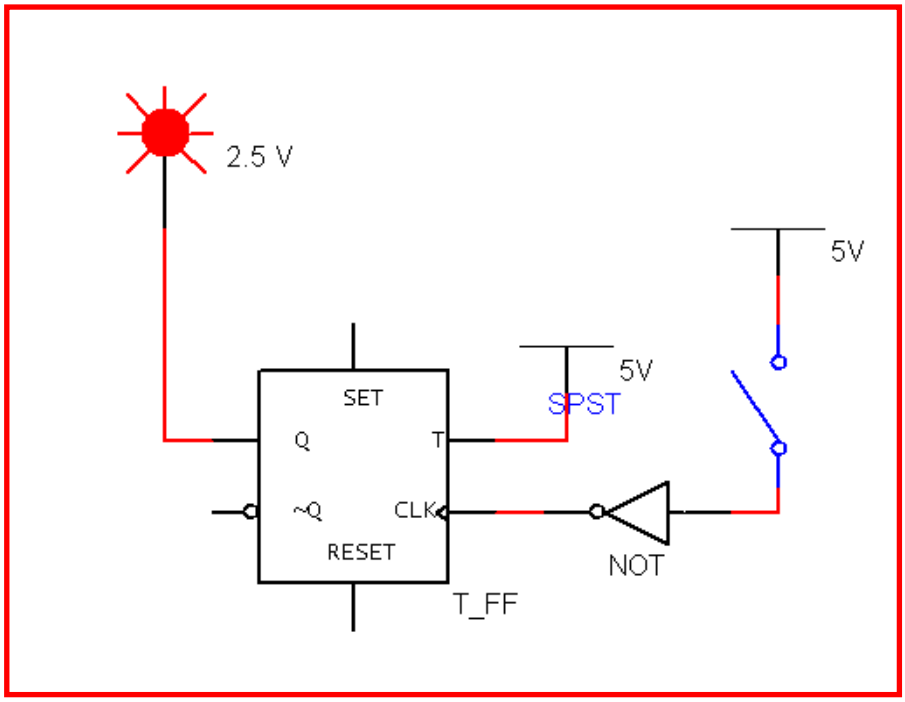

Circuit 1: Toggle Flip Flop

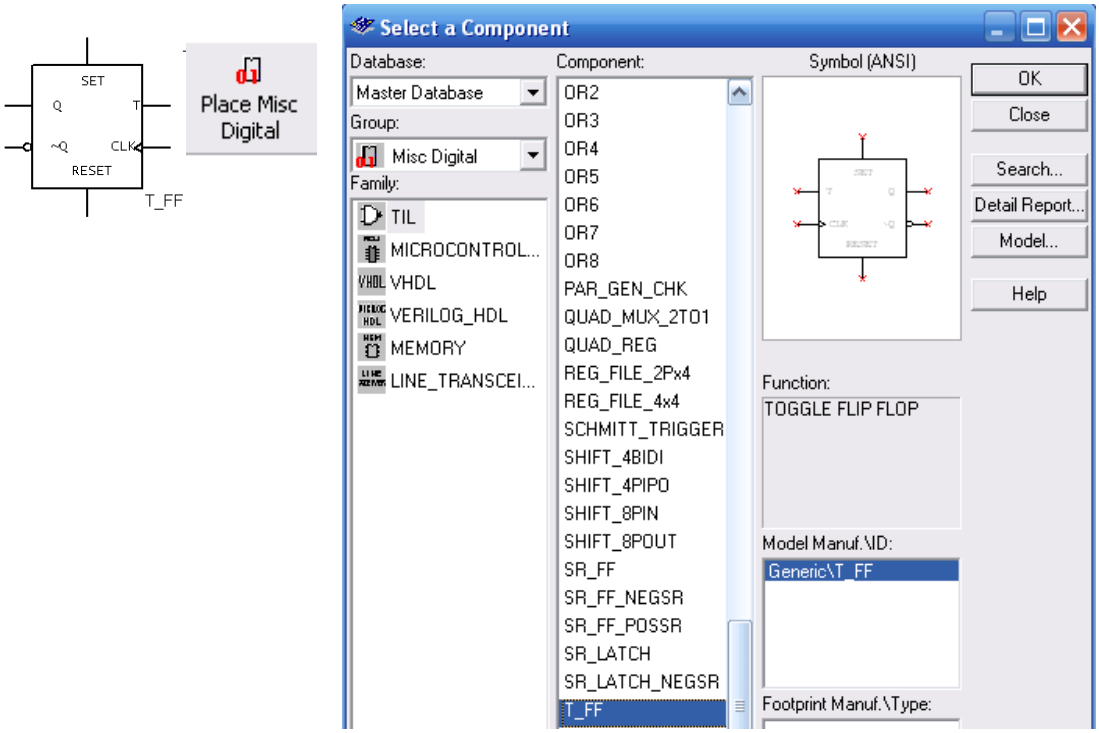

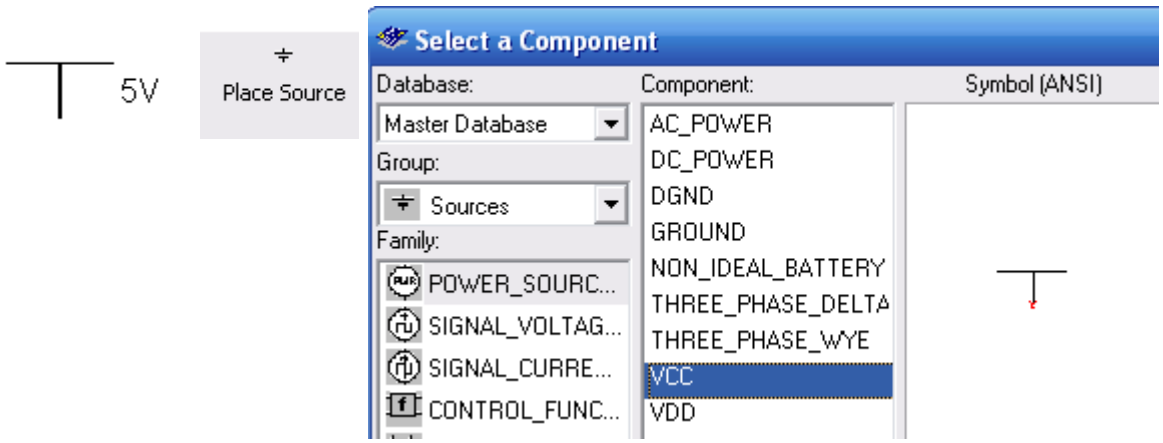
5V
Place Source
Select a Component
Database:
Master Database
Group:
Sources
Family:
POWER_SOURC...
SIGNAL_VOLTAG...
SIGNAL_CURRE...
CONTROL_FUNC...
Component:
AC_POWER
DC_POWER
DGND
GROUND
NON_IDEAL_BATTERY
THREE_PHASE_DELTA
THREE_PHASE_WYE
VCC
VDD
Symbol (ANSI)

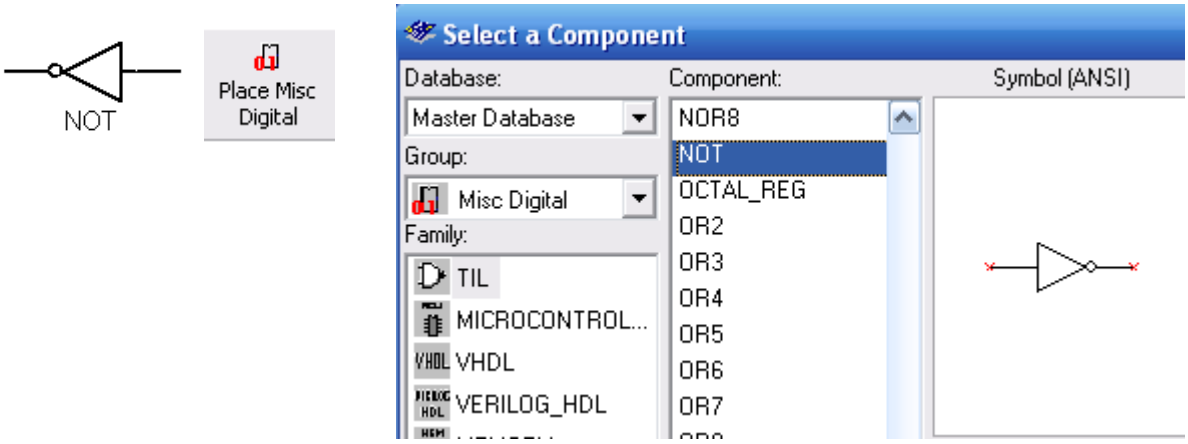
NOT
Place Misc Digital
Select a Component
Database:
Master Database
Group:
Misc Digital
Family:
TIL
MICROCONTROL...
VHDL
VERILOG_HDL
Component:
NOR8
NOT
OCTAL_REG
OR2
OR3
OR4
OR5
OR6
OR7
Symbol (ANSI)

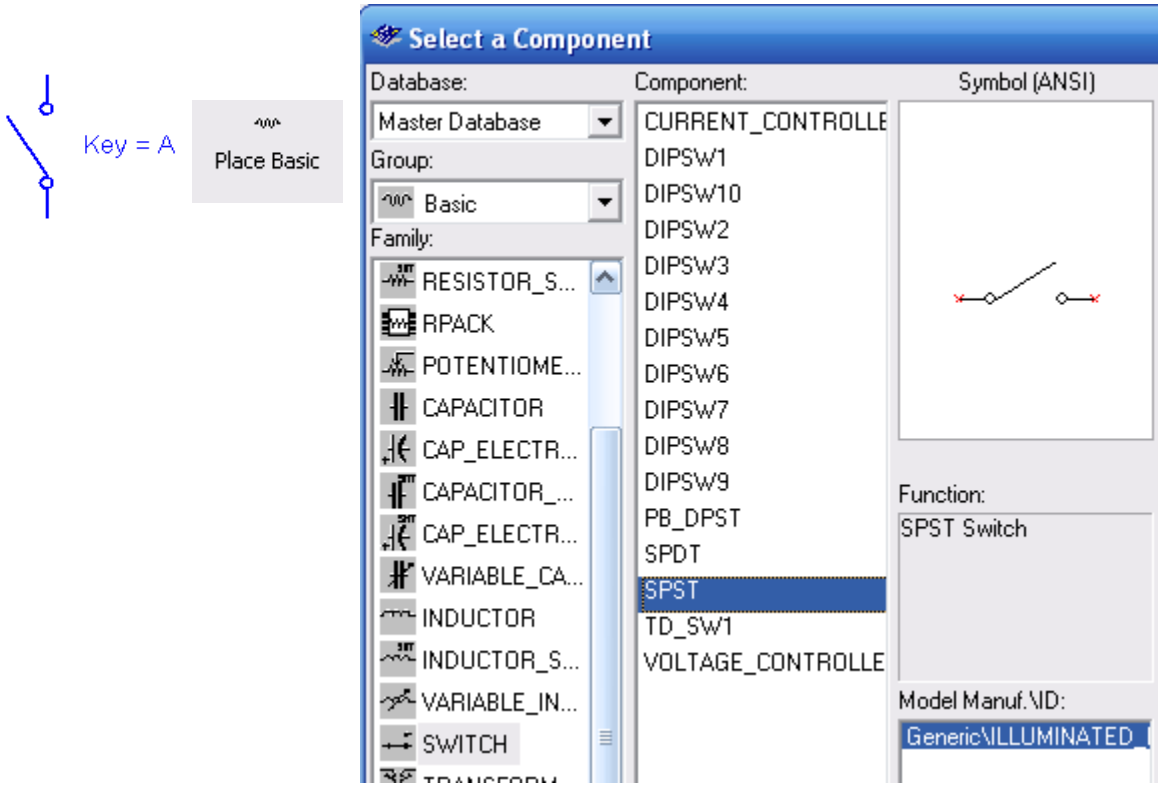
Key = A
Place Basic
Select a Component
Database:
Master Database
Group:
Basic
Family:
RESISTOR_S...
RPACK
POTENTIOME...
CAPACITOR
CAP_ELECTR...
CAPACITOR_...
CAP_ELECTR...
VARIABLE_CA...
INDUCTOR
INDUCTOR_S...
VARIABLE_IN...
SWITCH
Component:
CURRENT_CONTROLLE
DIPSW1
DIPSW10
DIPSW2
DIPSW3
DIPSW4
DIPSW5
DIPSW6
DIPSW7
DIPSW8
DIPSW9
PB_DPST
SPDT
SPST
TD_SW1
VOLTAGE_CONTROLLE
Symbol (ANSI)
Function:
SPST Switch
Model Manuf.\ID:
Generic\ILLUMINATED

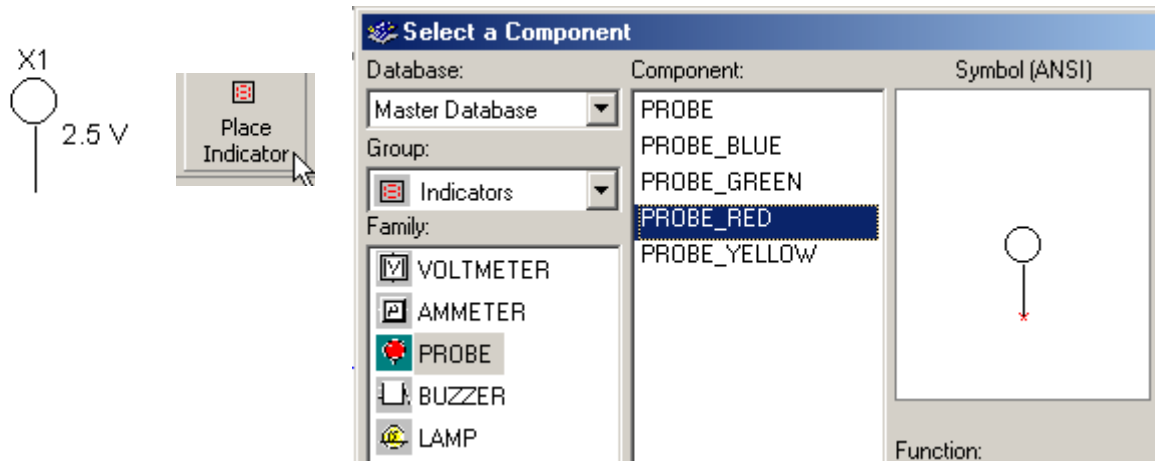
X1
2.5 V
Place Indicator
Select a Component
Database:
Master Database
Group:
Indicators
Family:
VOLTMETER
AMMETER
PROBE
BUZZER
LAMP
Component:
PROBE
PROBE_BLUE
PROBE_GREEN
PROBE_RED
PROBE_YELLOW
Symbol (ANSI)
Function:

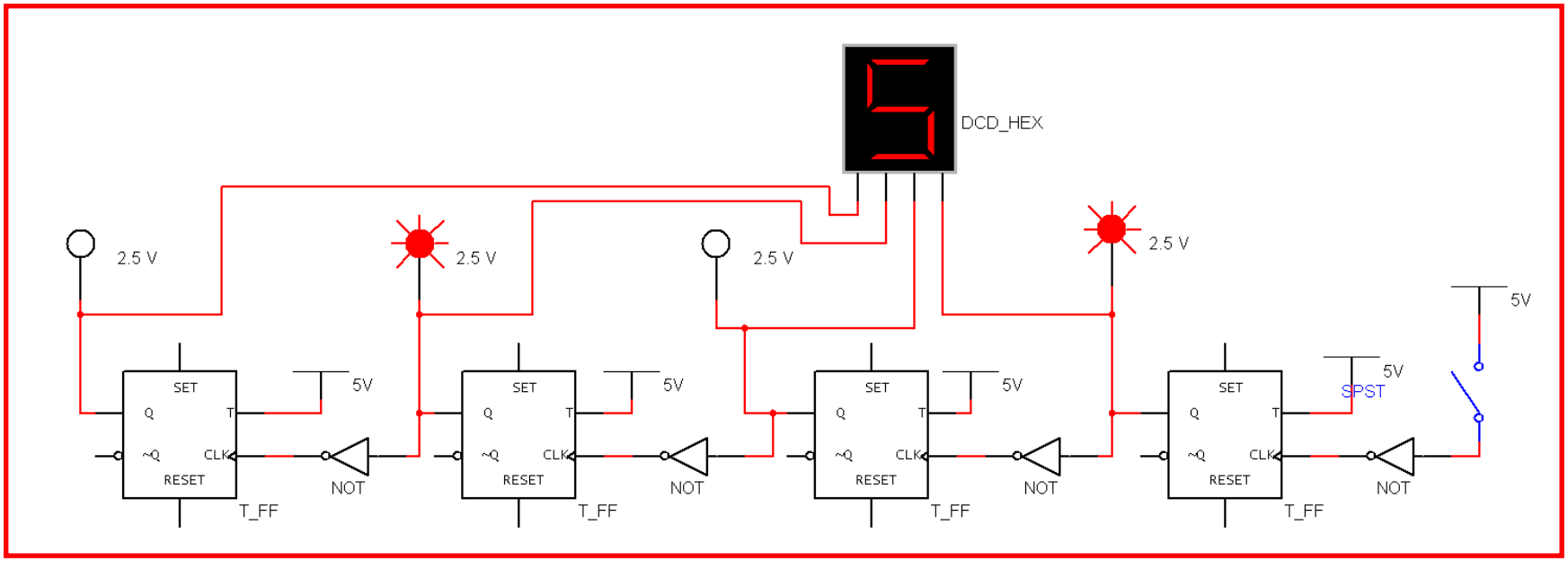

Circuit 2: Four Bit Binary Counter1

Use COPY PASTE on Circuit 1 to make the four bit binary counter of Circuit 2. Add the proper connections between the flip-flops and add the digital display.

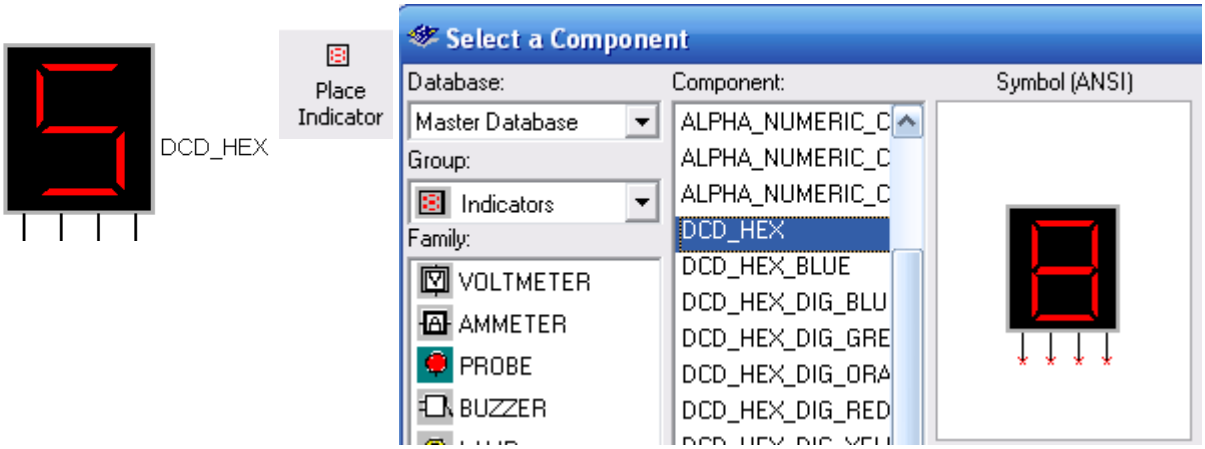

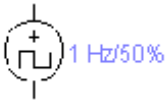

Circuit 3 consists of a signal generator set to give one transition per second. The counter integrated circuit, 7490, counts the transitions in binary and the value is shown on the four LED displays. The binary signals need to be converted to drive a 7 segment display. The binary to 7 segment decoder performs this task.

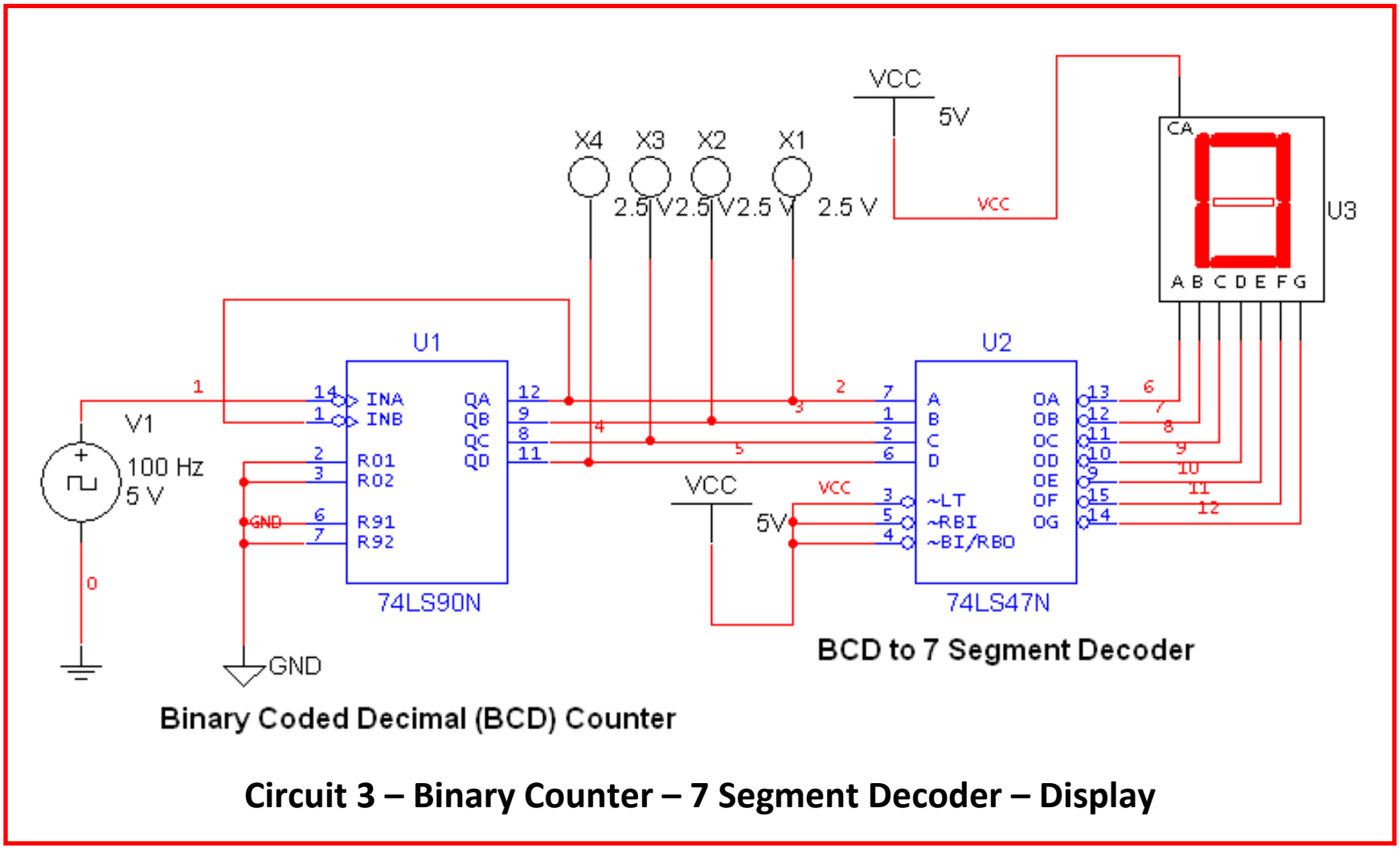

Circuit 3 – Binary Counter – 7 Segment Decoder – Display

Circuit 3:

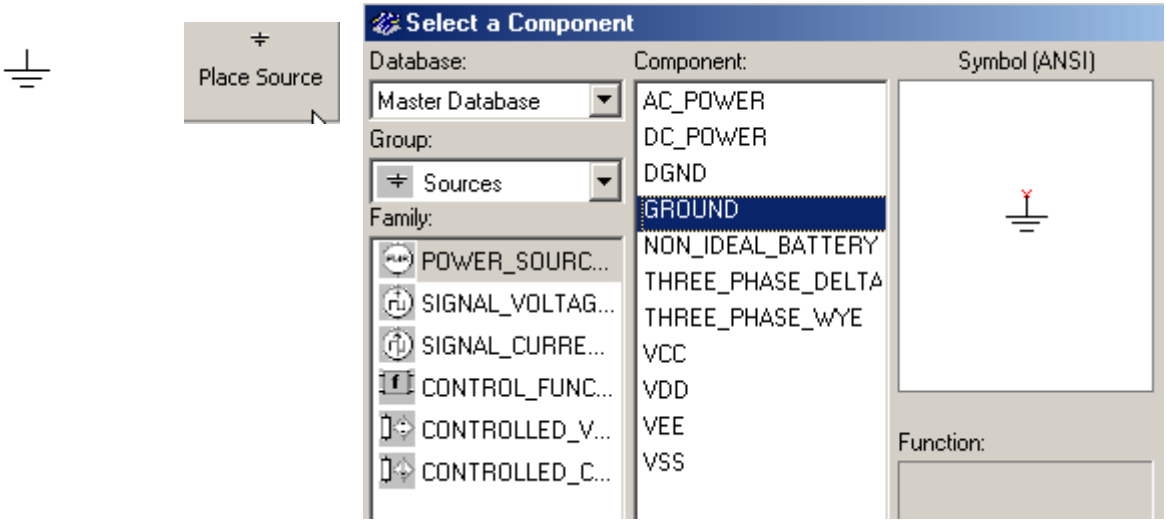
Place Source
Select a Component
Database:
Master Database
Group:
Sources
Family:
POWER_SOURC...
SIGNAL_VOLTAG...
SIGNAL_CURRE...
CONTROL_FUNC...
CONTROLLED_V...
CONTROLLED_C...
Component:
AC_POWER
DC_POWER
DGND
GROUND
NON_IDEAL_BATTERY
THREE_PHASE_DELTA
THREE_PHASE_WYE
VCC
VDD
VEE
VSS
Symbol (ANSI)
Function:

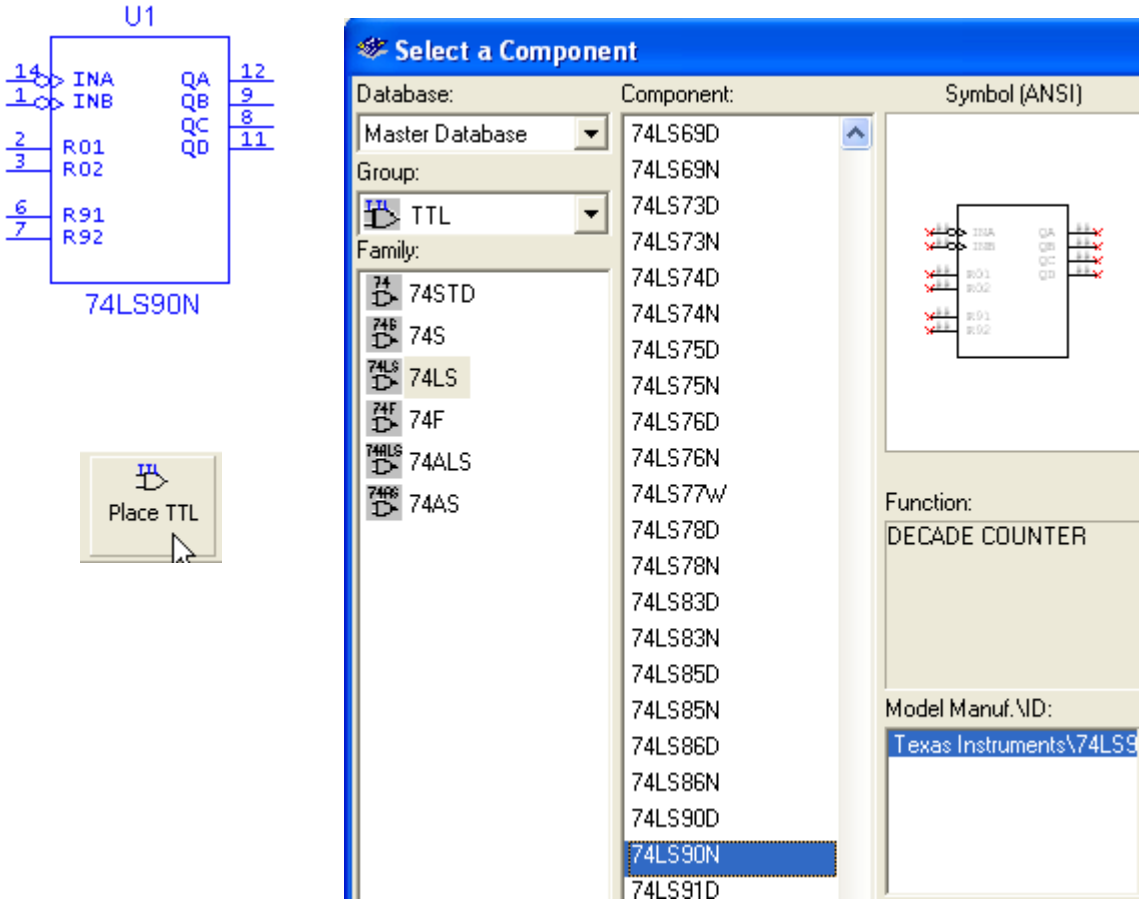
U1
14
1
INA
INB
2
3
R01
R02
6
7
R91
R92
QA
QB
QC
QD
12
9
8
11
74LS90N
Place TTL
Select a Component
Database:
Master Database
Group:
TTL
Family:
74STD
74S
74LS
74F
74ALS
74AS
Component:
74LS69D
74LS69N
74LS73D
74LS73N
74LS74D
74LS74N
74LS75D
74LS75N
74LS76D
74LS76N
74LS77W
74LS78D
74LS78N
74LS83D
74LS83N
74LS85D
74LS85N
74LS86D
74LS86N
74LS90D
74LS90N
74LS91D
Symbol (ANSI)
Function:
DECADE COUNTER
Model Manuf.\ID:
Texas Instruments\74LS9

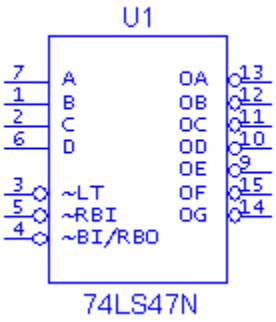

Locate using the same menues as the 74LS90N except select 74LS47N.

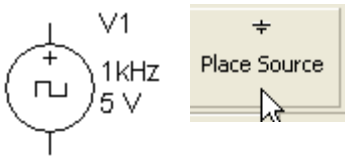

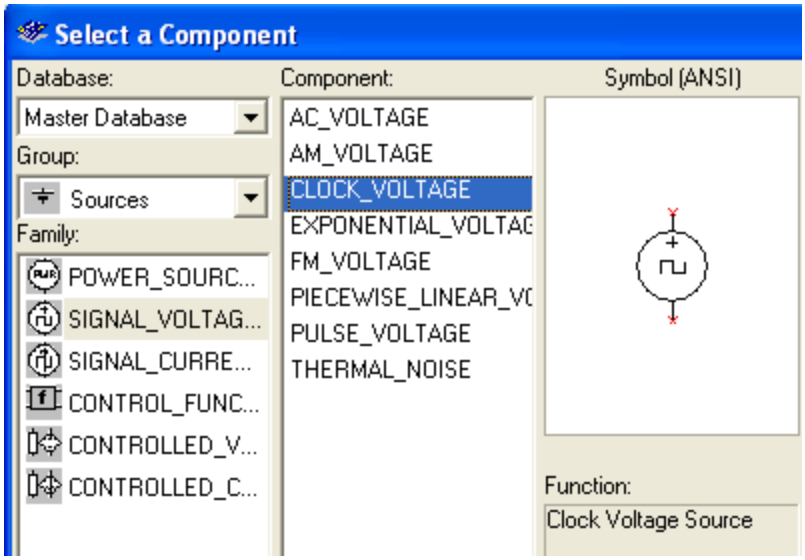

Double click on symbol to set values on the device.

If the circuit is running when you change its speed, you will have to stop it and start it again for the new value to be recognized.

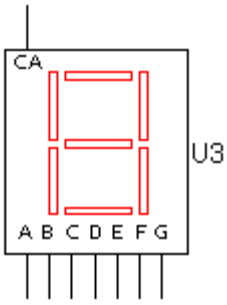

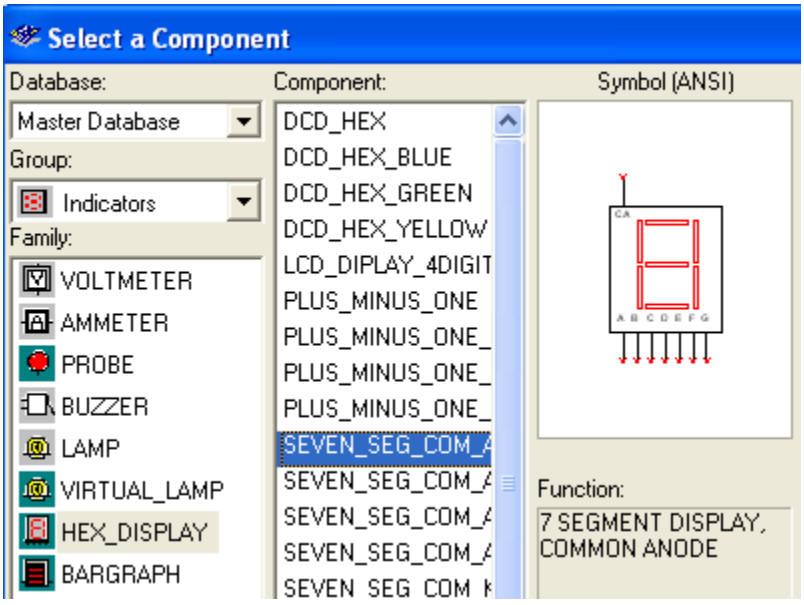

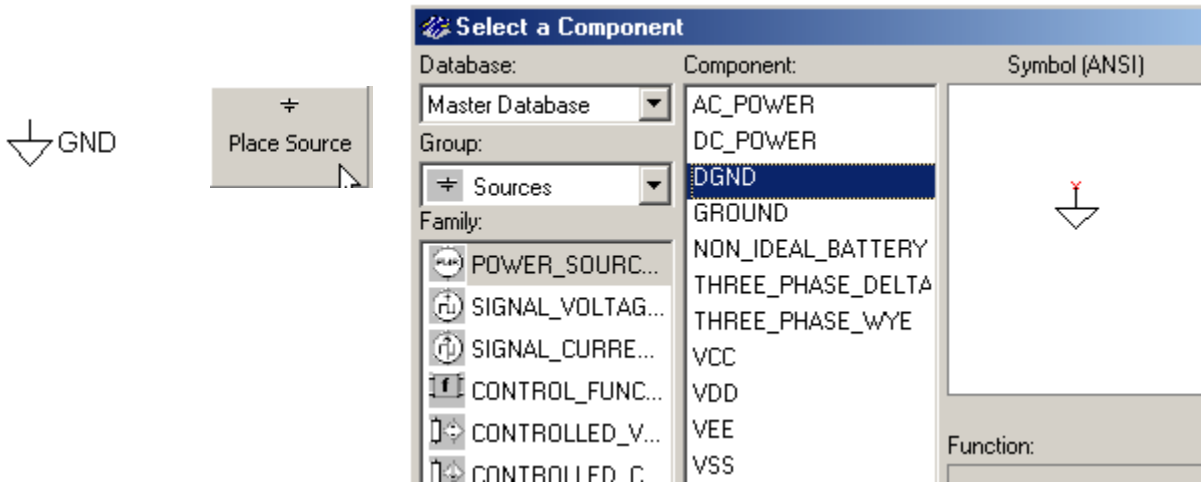
GND
Place Source
Select a Component
Database:
Master Database
Group:
Sources
Family:
POWER_SOURC...
SIGNAL_VOLTAG...
SIGNAL_CURRE...
CONTROL_FUNC...
CONTROLLED_V...
Component:
AC_POWER
DC_POWER
DGND
GROUND
NON_IDEAL_BATTERY
THREE_PHASE_DELTA
THREE_PHASE_WYE
VCC
VDD
VEE
VSS
Symbol (ANSI)
Function:

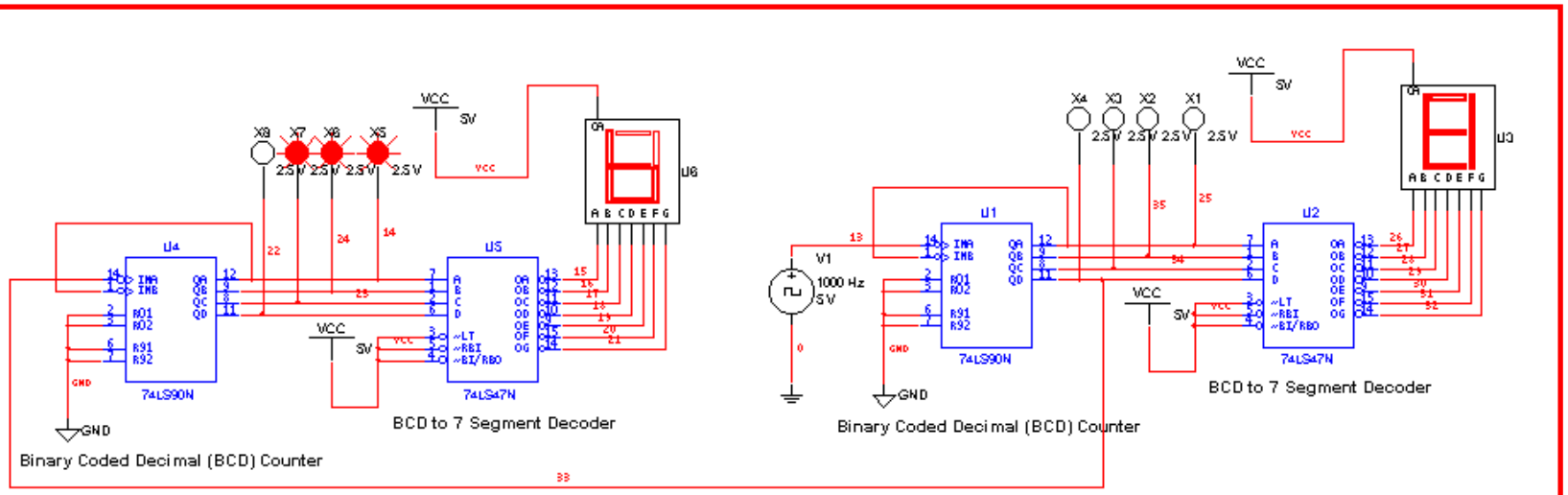

Circuit 4. Two Decade Counter

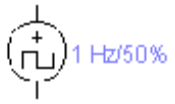

Do a COPY PASTE of Circuit 3 to make the two decade counter of Circuit 4. Remove the count generator from the left digit. Connect the QD output of the right counter to the count input of the left counter. This will cause the 10's digit to increment when the units digit goes from 9 back to 0.

Circuit 4:

Changing Page Size: Edit | Properties |

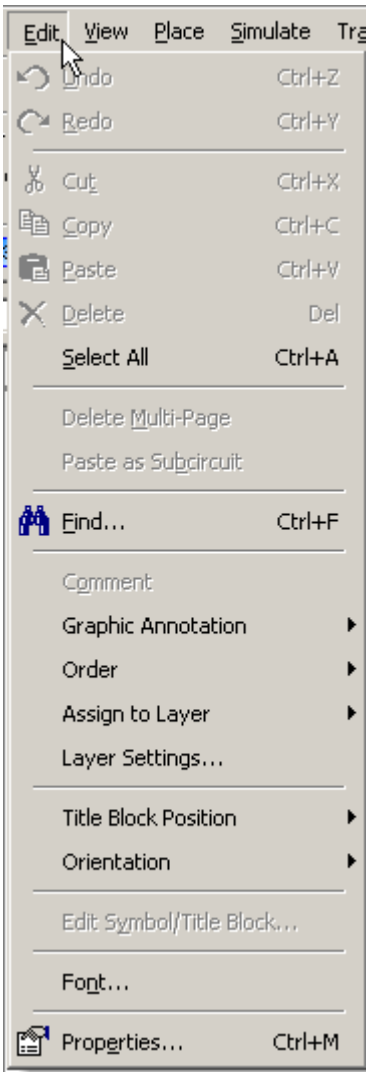

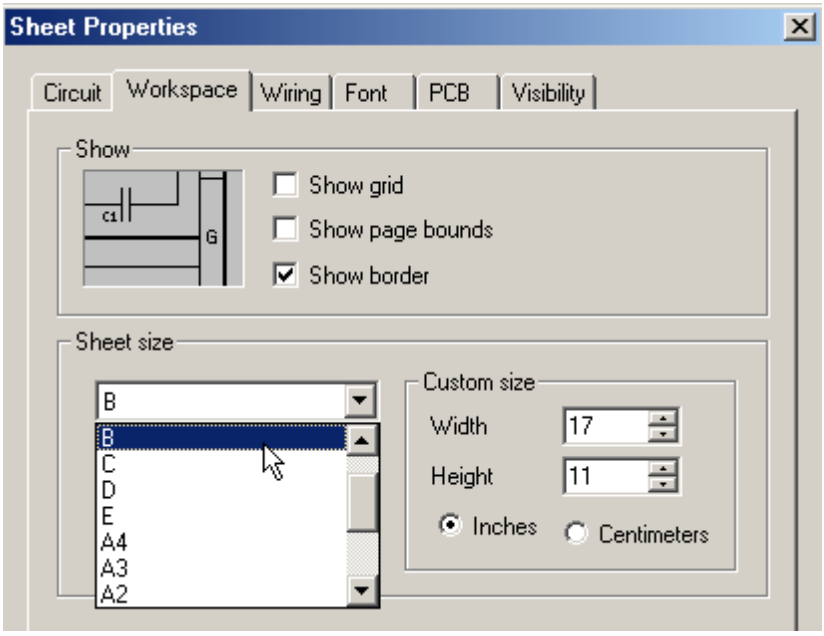

After you have completed the above circuits to your satisfaction, you can, as time permits, experiment with the remaining circuits.

Next we will make a two decade counter which will count from 00 to 99. Change the size of the drawing sheet to size B. Move the circuit to the right side of the page by doing Edit | Select All (control A) and dragging the components to the desired position. Make a copy of the circuit by Select All and Paste (control V). Delete the signal generator on the left counter. The QD signal of the least significant digit will be used to clock the next stage. Place a wire from INA to QD.

Create the following circuit. Use the DGND for the GND component. Use the DCD_HEX component which combines the decoding and display in one component. This will speed simulation so the circuit will count faster. The switch will cause the counter to reset when connected to Vcc and to count normally when connected to ground. Double click on the wire connected to R01 and name the net Reset.

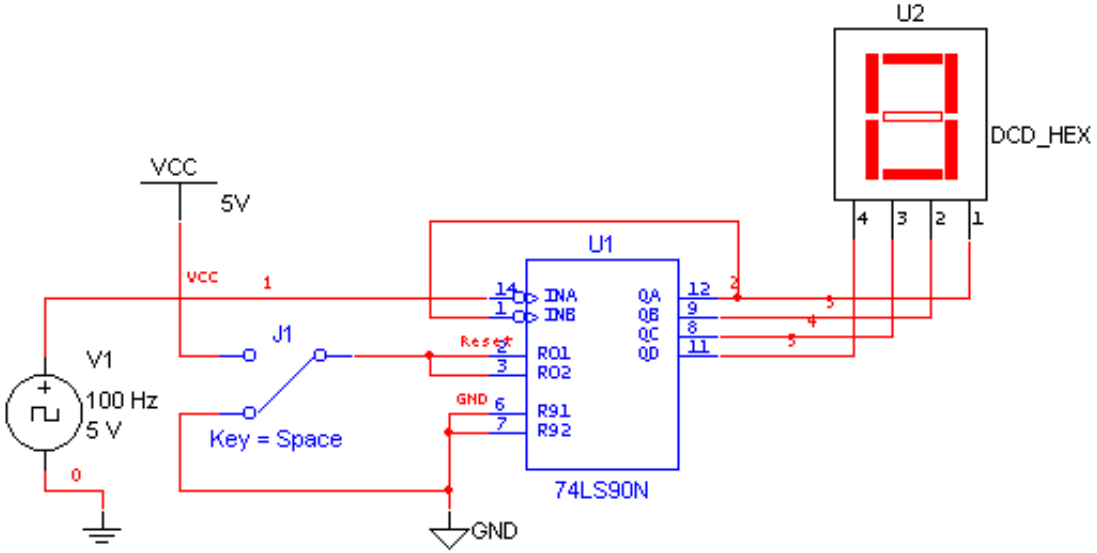

Circuit 5. Counter with Display

Circuit 5:

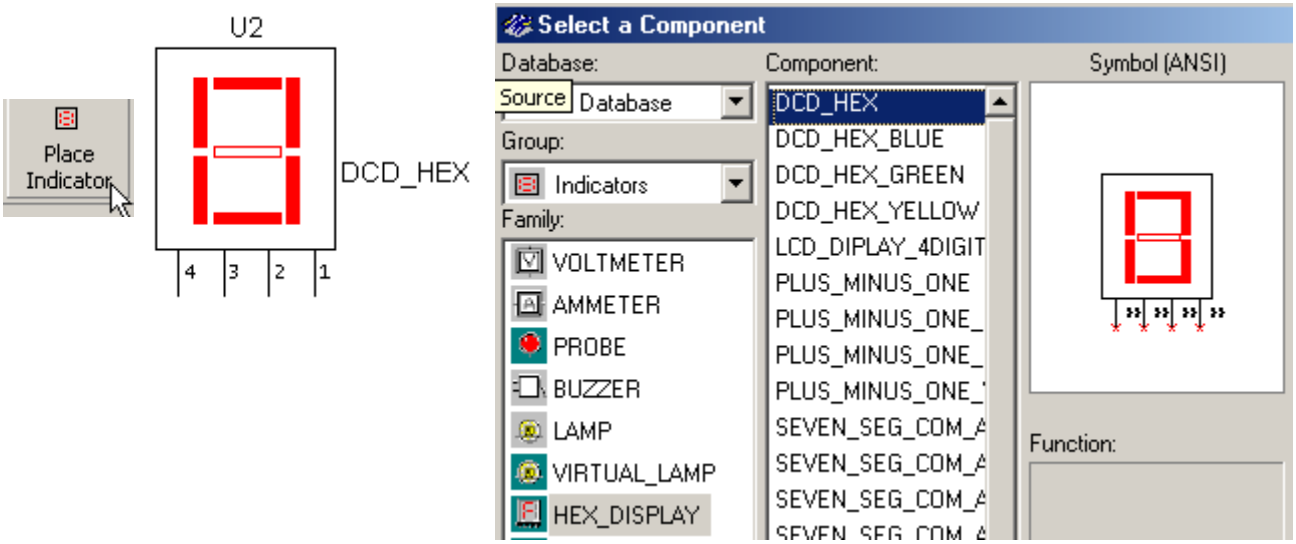

Naming a Wire

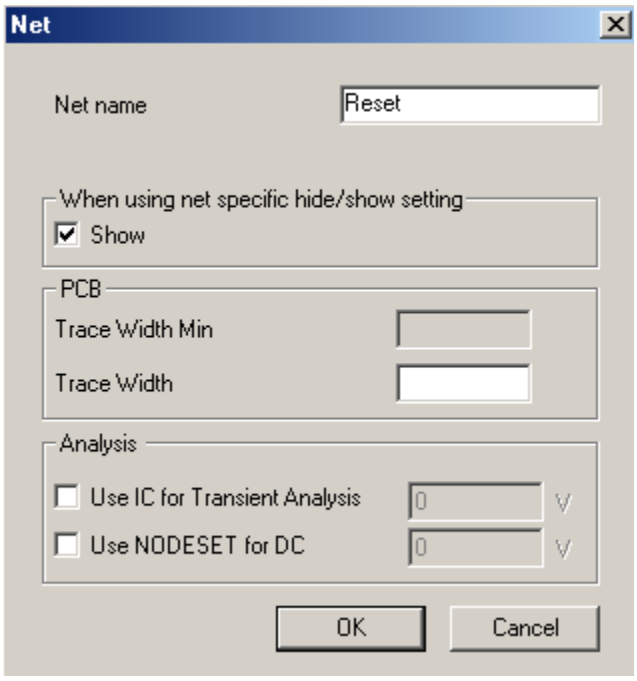

A warning you get if you have previously used the same name.

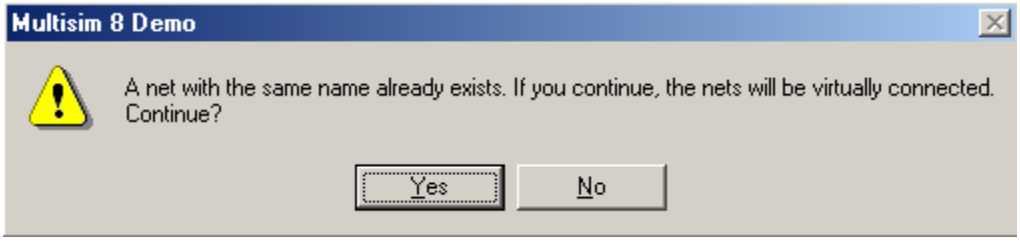

Copy the circuit three times to make a four digit counter. Double click the wire connected to R01 and name it Reset. You should get a warning that that name has been used. Click OK. This will make a connection between both wire named Reset without having to draw the line. Do the same to the other two counters. Connect the QD of a counter to the INA of the next counter. Set the clock frequency to 1000Hx. Remember to stop and then start the simulation after changing the clock speed.

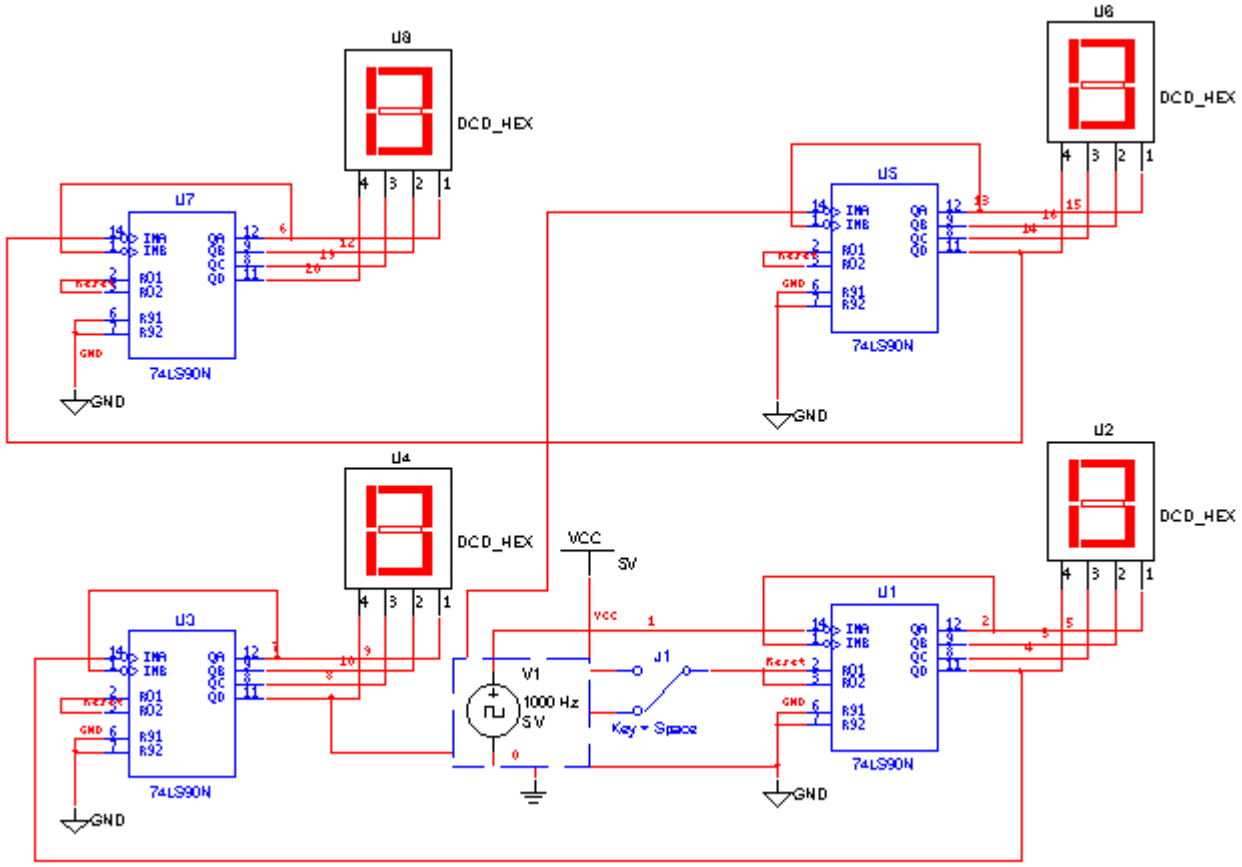

Circuit 6

Use of the Breadboarding Trainers

The trainers we will be using are a self-contained unit which has its own power source, switches, displays and an area in which to build prototype circuits. The integrated circuits have already been placed horizontally on the breadboard. This orientation places pin 1 on the lower left corner. The pin numbering progresses counter clockwise. The largest pin number will be on the top left corner. The 74LS08, 74LS32, and the 74LS90 have 14 pins. The 74LS47 has 16 pins.

Jumper wires are placed in the holes adjacent to pins which are to be connected. The horizontal rows of pins adjacent to the red lines have been connected to +5 volts (Vcc). The horizontal rows of pins adjacent to the blue lines have been connected to ground.

The figure below shows where the integrated circuits are installed on the breadboard. On the 74LS90, a wire connects pin 1 to pin 12, another wire connects pin 7 to the ground strip, and another connects pin 5 to the Vcc strip. The four holes which are vertical to a pin are connected together so it doesn't matter which of the four holes is used. The upper row is used for the first circuit and the bottom row is used for the second circuit.

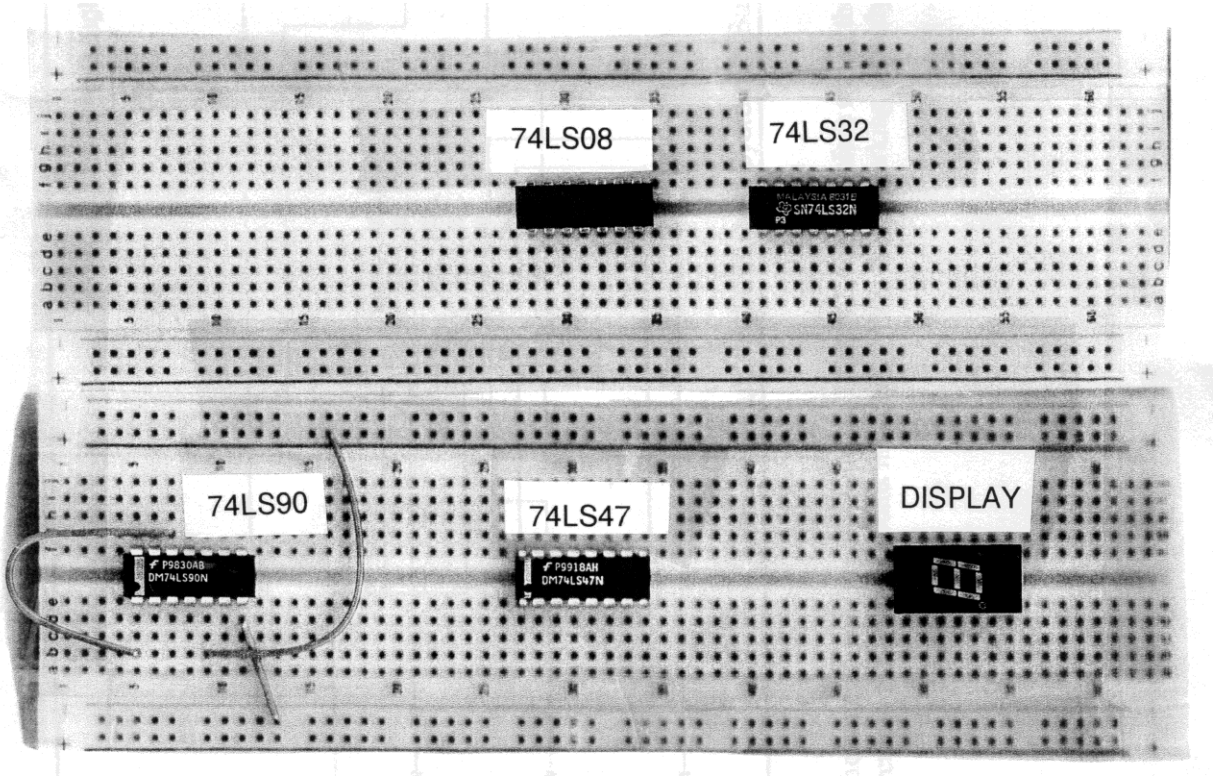

The automobile buzzer circuit and the counter circuit will be built on the prototyping boards. It can be confusing as to what has been wired and what still needs to be wired. A good method of keeping track of which wires have been connected is to put a check mark on the schematic or highlight wires as they are connected.

To help keep track of which wires have been placed, place a checkmark on the wire or highlight the wire on the schematic.

This is the first part of the counter circuit you will build in the lab. Wire the 7490 and 7447. Connect the counter outputs to LEDs 4, 5, 6, & 7 on the trainer. Apply power and toggle the Pulse switch. The LEDs should count in binary from 0 through 9. When this is working properly, connect the remainder of the circuit as shown on the following page. A picture on page 17 shows how the completed circuit will look.

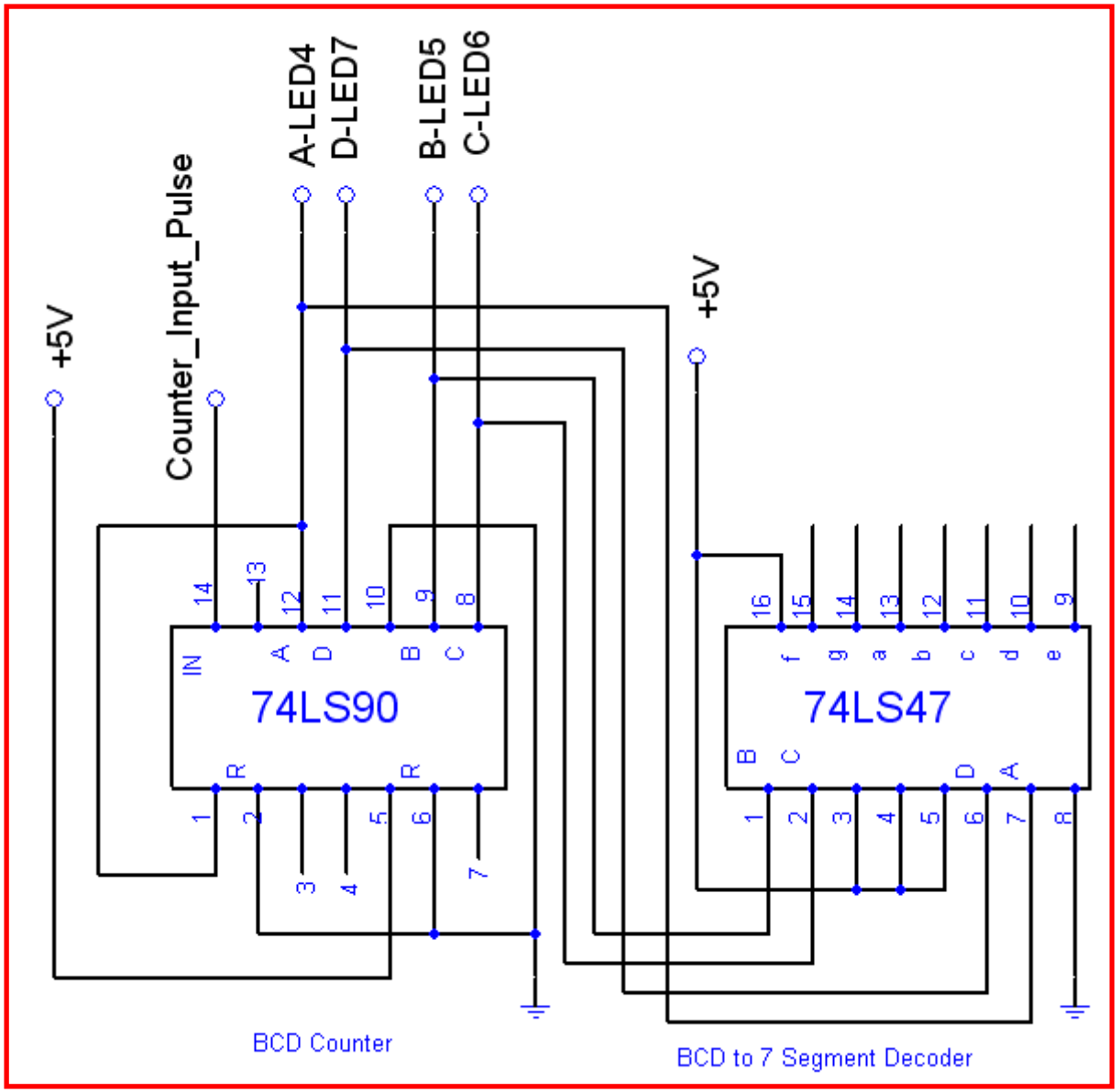

Circuit 7A BCD Counter on Trainer

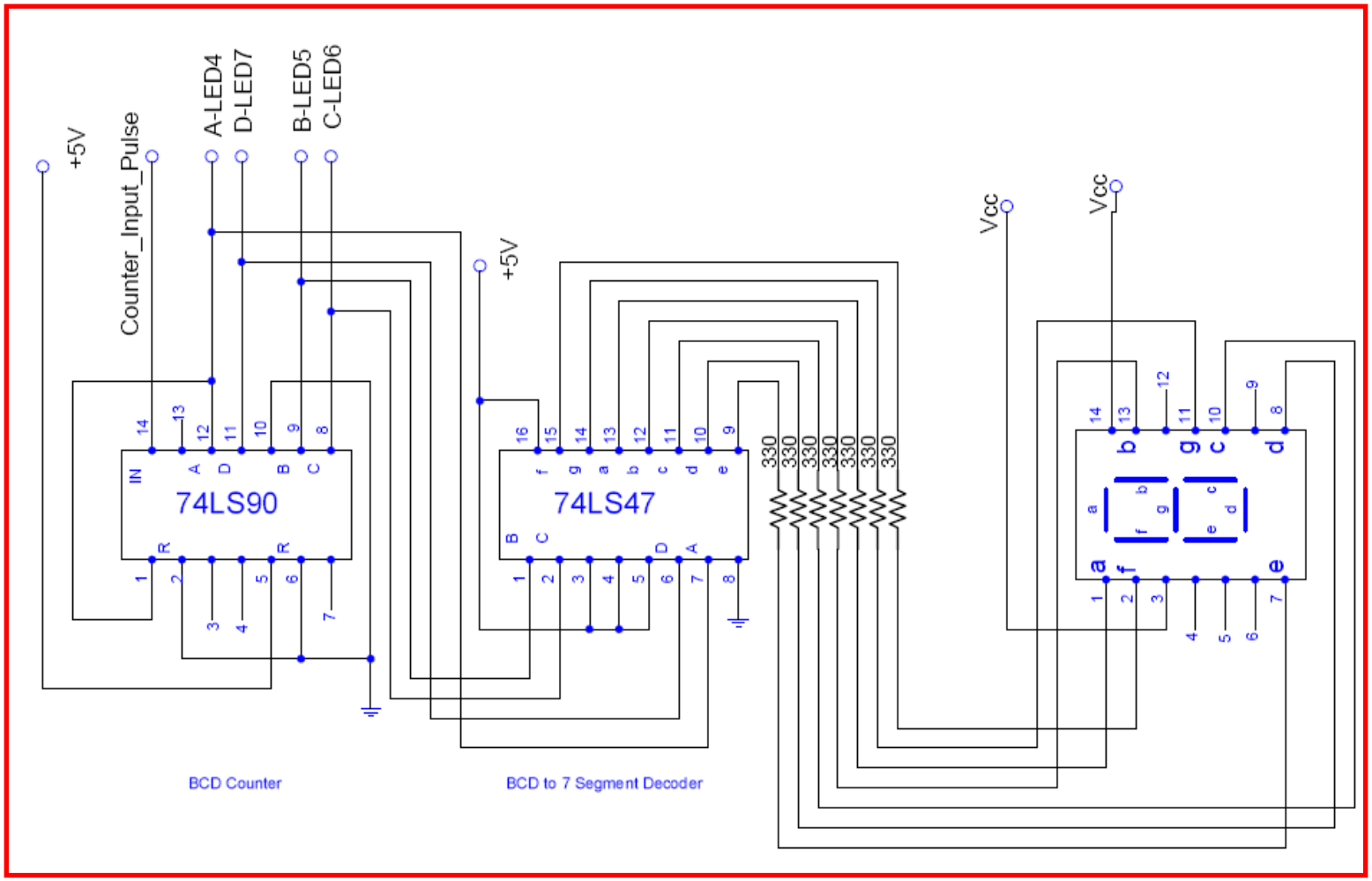

Circuit 7B – BCD Counter on Trainer

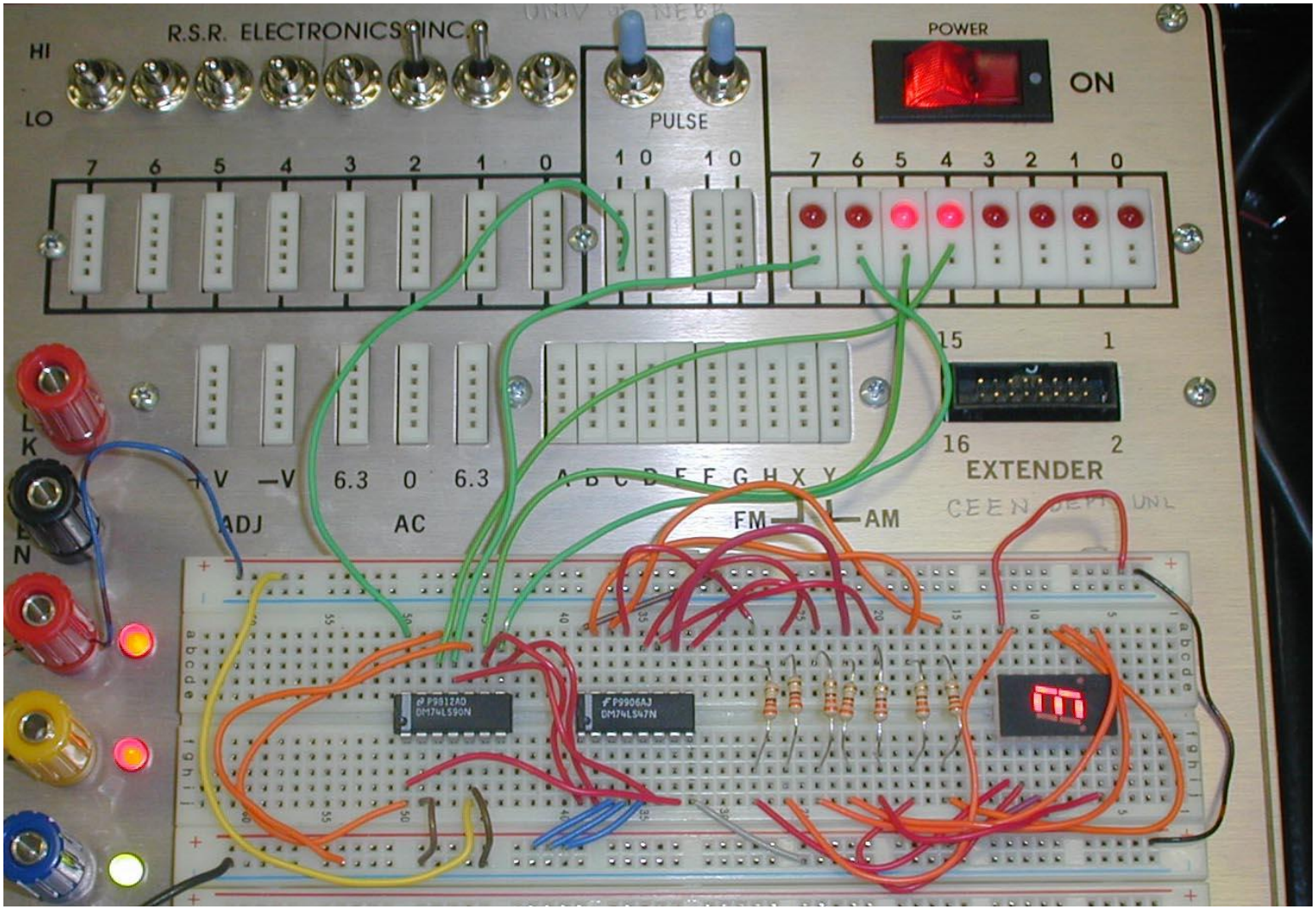
R.S.R. ELECTRONICS INC.
HI
LO
PULSE
POWER
ON
7 6 5 4 3 2 1 0
1 0 1 0
7 6 5 4 3 2 1 0
15 1
16 2
EXTENDER
+V −V 6.3 0 6.3
ADJ
AC
A B C D E F G H X Y
FM
AM
CEEN DEPT UNL
P9812AD
DM74LS90N
P9906AJ
DM74LS47N

References:

Simulation Software:

Electronics Workbench USA
60 Industrial Park, #068
Cheektowaga, NY 14227

www.electronicsworkbench.com

Electronic Components:

Jameco Electronic Components
1355 Shoreway Road
Belmont, CA 94002

www.jameco.com

Breadboard:

PAD_234 Digital/Analog Trainer

Electronix Express
365 Blair Road
Avene l, New Jersey 07001

www.elexp.com/tst_234.htm